AYVAZ

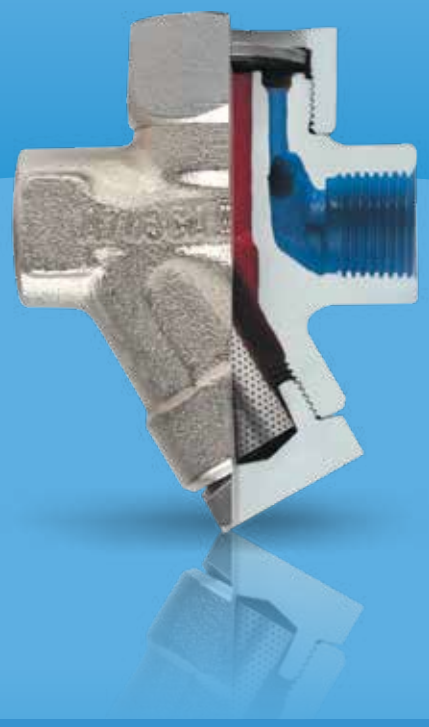

TDK-71

THERMODYNAMIC STEAM TRAP

GENERAL FEATURES

Ayvaz TDK-71 thermodynamic steam traps leak tightness parts are made of stainless steel and body is made of stainless steel casting. Output pressure shouldn't pass %80 of initial pressure at operating conditions. TDK-71 can work automatically depending on condensate load. We can supply all spare parts. Filter is type Y and cleaning is very easy.

Ayvaz TDK-71 should be assembled to the pipe line at horizontal position for working efficiently and long working time. Isolation valves should be used for safety during the maintenance and steam traps changing.

Product Features

Body	Stainless Steel AISI 304
Cover	Stainless Steel AISI 304
Internals and float	Stainless Steel AISI 304
Connection Types	Threaded

Operation Conditions

Max. Operating Pressure (PMO)	42 bar
Body Pressure Class	PN63
Max. Operating Temperature (TMO)	400°C

Discharge Capacity (1/2"-1")

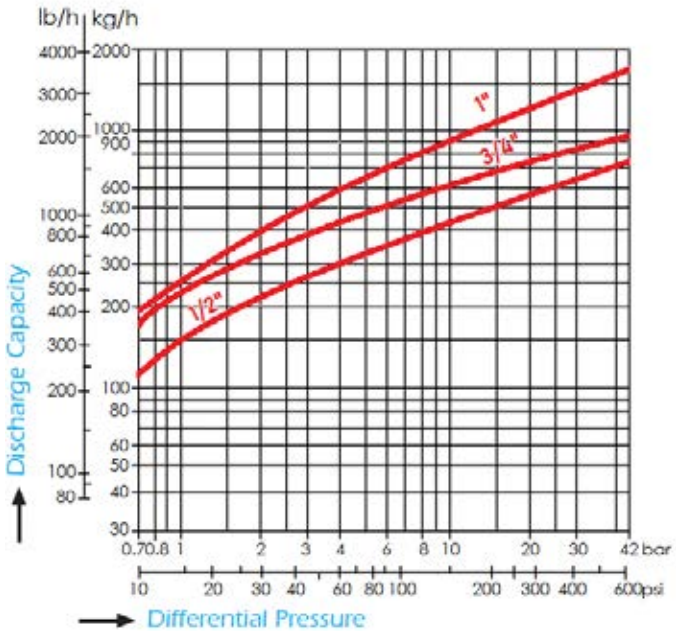

ISO PN 42 MAX. 400°C

10.2018

TDK-71 THERMODYNAMIC STEAM TRAP

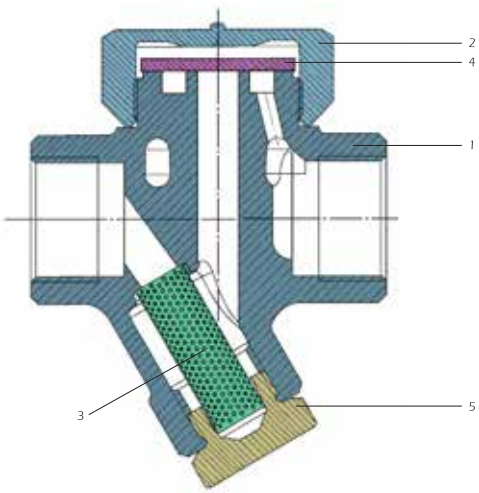

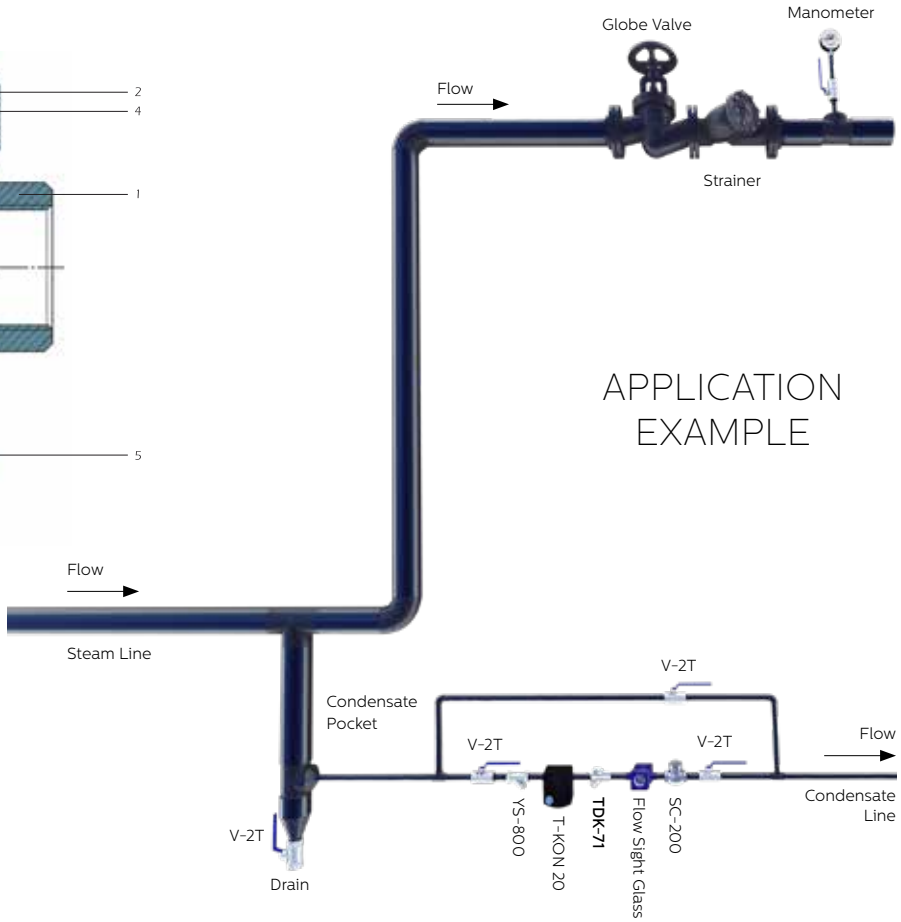

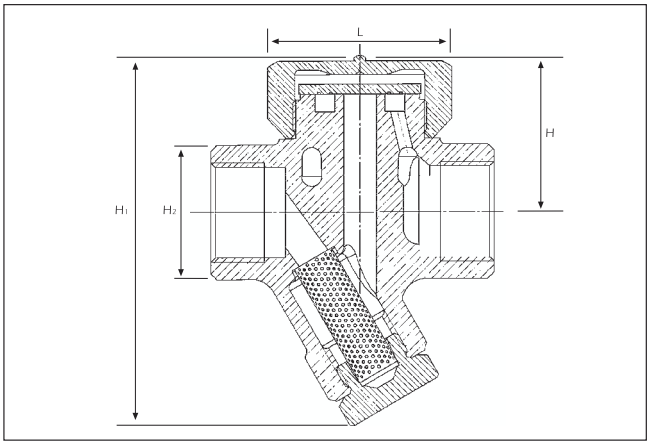

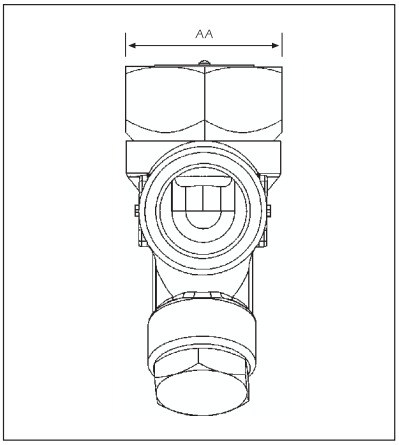

SPARE PARTS		
No	Name	Material
1	Body	Stainless Casting ASTM A743(CA 40F)
2	Cover	Stainless Steel AISI 304
3	Strainer Screen	Stainless Steel AISI 304
4	Disc	Stainless Steel AISI 420
5	Discharge Bolt	Stainless Steel AISI 304

DIMENSIONS					
Size	L	H	H1	H2	AA
1/2"	78	41	95	33	41
3/4"	90	43	110	39	41
1"	95	52	124	45	55

TDK-71 THERMODYNAMIC STEAM TRAP

OPERATION

At start-up, the disc is pushed off its seat by any air or condensate entering the trap. When the steam enters the trap, it passes through the reduced area at the face of the disc, increasing in velocity and, therefore, decreasing in pressure. Some of the steam is discharged directly into the outlet stream, but a portion of it passes to a control chamber above the disc. The disc snaps shut because the pressure in the control chamber above acts on the whole disc, while the inlet pressure of the high-velocity steam acts only on a small area of the disc.

A small bleed groove across the disc allows the steam and air to bleed out of the control chamber over time. When the force above the disc is overcome by the force of incoming steam, condensate or air on the face of the disc, the trap opens, discharging condensate that has accumulated during the cycle.

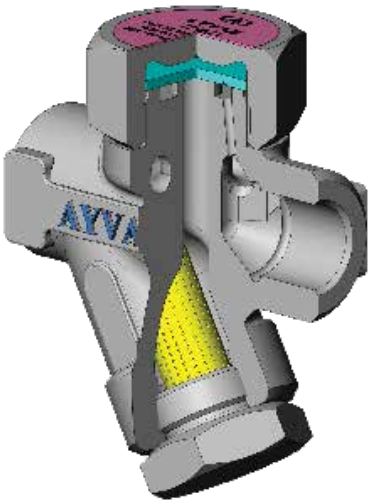

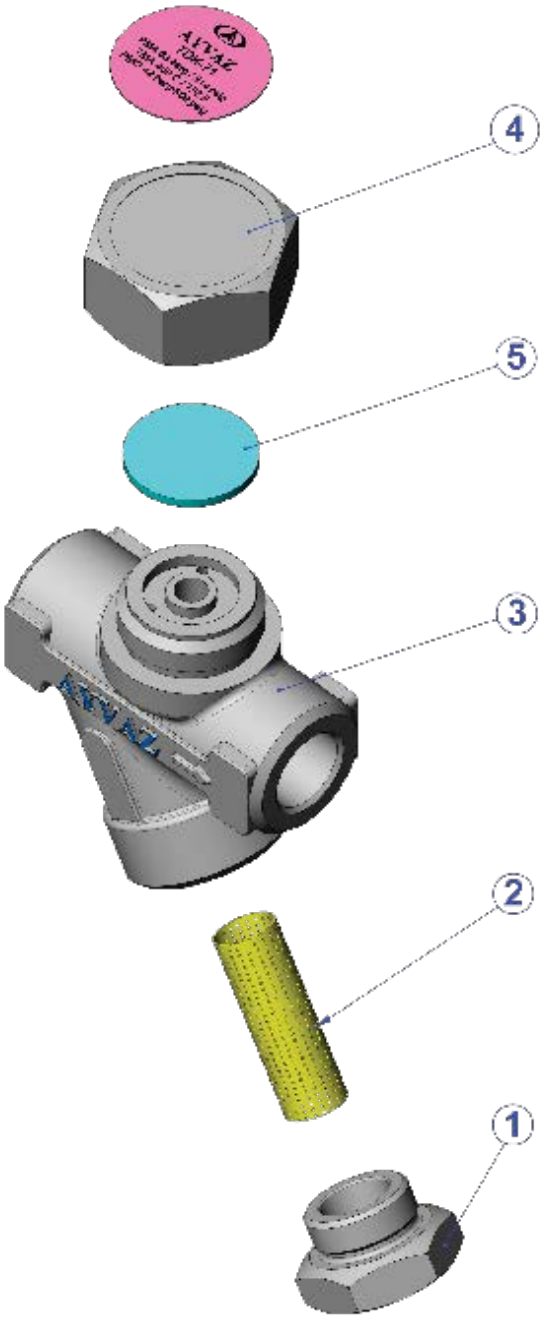

PART LIST		
NO	PART NAME	MATERIAL
1	Discharge Bolt	Stainless Steel AISI 304
2	Strainer Screen	Stainless Steel AISI 304
3	Body	ASTM A743 CA40F Corrosion resistant alloy
4	Cover	Stainless Steel AISI 304
5	Disc	Stainless Steel AISI 420

TDK-71

THERMODYNAMIC STEAM TRAP

AYVAZ

HEAD OFFICE - FACTORY
Atatürk Sanayi Bölgesi Hadımköy Mahallesi Mustafa İnan Caddesi No: 44 Arnavutköy - İSTANBUL
Tel: +90 212 771 01 45 (pbx) | Fax: +90 212 771 47 27
info@ayvaz.com | www.ayvaz.com

Cona
Caserta/Italy
Tel: +39 0823 187 3988
rmolaro@ayvaz.com

Ayvaz Germany
Viernheim/Germany
Tel: +49 62046014399
germany@ayvaz.com

Ayvaz Ukraine
Kiev/Ukraine
Tel: +380 44 390 57 57
info@ayvaz.com.ua

Tricorr
Warsaw/Poland
Tel: +48 530 030 810
+48 533 603 335
tricorr@tricorr.eu

Ayvaz Azerbaijan
Baku/Azerbaijan
Tel: +99 (455) 579-84-32
ahayatov@ayvaz.com

Ayvaz Egypt
Cairo/Egypt
Tel: +20 122 819 78 29
andrew.eid@ayvaz.com

Ayvaz Gulf
Dubai/U.A.E
Tel: +971 563550822
+971 501306871
mideast@ayvaz.com

Ayvaz China
Ningbo/China
Tel: +86 152 5830 7361
msahin@ayvaz.com

Ayvaz Kazakhstan LLP
Almaty/Kazakhstan
Tel: +7 (727) 327 97 57
info_kz@ayvaz.com

Ayvaz N
Isperih/Bulgaria
Tel: +359 8431 27 32
office@ayvaz-n.eu

Ayvaz Serbia
Belgrade/Serbia
Tel: +381 61 658 70 52
yakbiyik@ayvaz.com

Ayvaz Vietnam
HCMC/Vietnam
ggursoy@ayvaz.com
Tel: +84 89 8508345

Ayvaz Americas
Rhode Island/USA
Tel: +1 401 737 8380
americas@ayvaz.com