AYVAZ

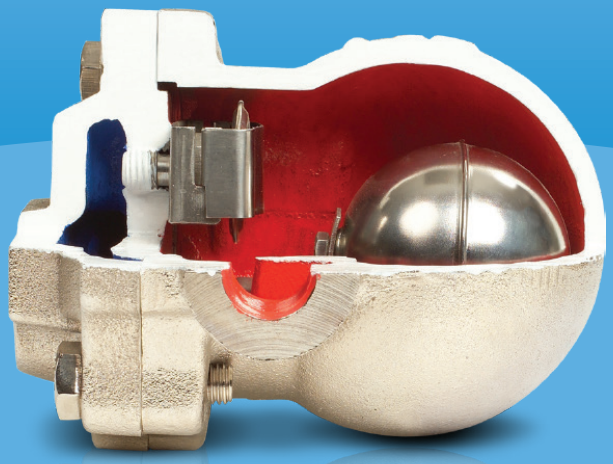

SK-61

FLOATING BALL STEAM TRAP

GENERAL FEATURES

SK-61 Float Steam Trap is used for discharging the condensate by a mechanical float system. When the system starts up, thermostatic air vent is activated and discharges the air in the system. After this process, incoming steam will close the air vent. However when condensate reaches the steam trap, the float rises and open the main valve and discharges the condensate. As soon as the condensate discharge is completed and the steam reached into the trap, the float goes down and closes the valve. As it is designed that always some water stays on the valve system, water sealing is provided. That prevents possible steam leakages. Condensate level in SK-61 can be seen through the sight glass as optional.

Material Parts

Body And Cover: AISI 316 Stainless Steel

Inner Parts: Stainless Steel

Connection:
Threaded, Flanged and Socket

Nominal Diameter:
DN15 (1/2") - DN50 (2")

Pressure:
Max. 25 bar

Working Temperature:
Max. 250 ºC

Application Areas:
- Heat Exchangers
- Heating Batteries
- Tanks
- Pans-Drying Cylinders
- Pharmaceutical Industry
- Chemical Industry
- Food Industry

Connection Type	Flanged	Threaded
Diameter (mm)	15-20-25-32-40-50	1/2"- 3/4"-1"- 1 1/4"- 1 1/2"-2"
Weight (kg)	5.5-5.5-6.85-20.8-21.8-33	4.10-4.10-4.65-16.8-17.6-22

SK-61 FLOATING BALL STEAM TRAP

TECHNICAL SPECIFICATIONS

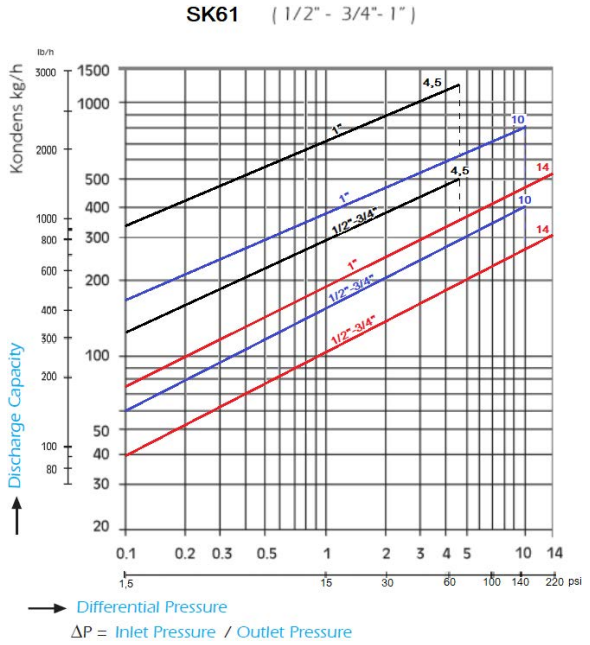

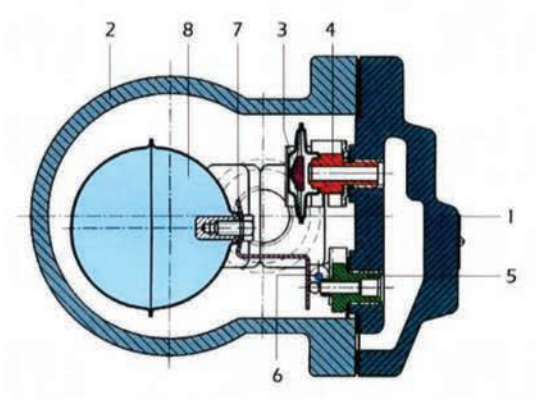

SPARE PARTS		
No	PART NAME	MATERIAL
1	Body	AISI316 SS
2	Cover	AISI316 SS
3	Termostatic Capsule	Stainless Steel
4	Air Vent Seat	Stainless Steel
5	Float Seat	Stainless Steel
6	Main Valve	Stainless Steel
7	Float Lever	Stainless Steel
8	Float	Stainless Steel

Dia.	DIMENSIONS (mm)				
	A	K	B	C	D
15	150	150	108	68	122
20	150	150	108	68	122
25	160	167	108	107	145

All dimensions are given in mm.

FLANGED CONNECTION

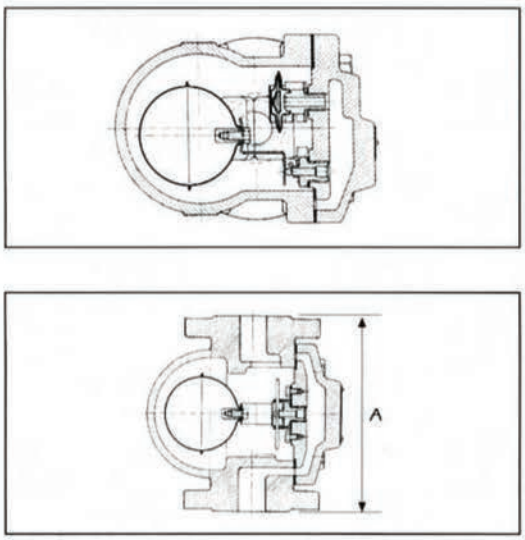

THREADED CONNECTION

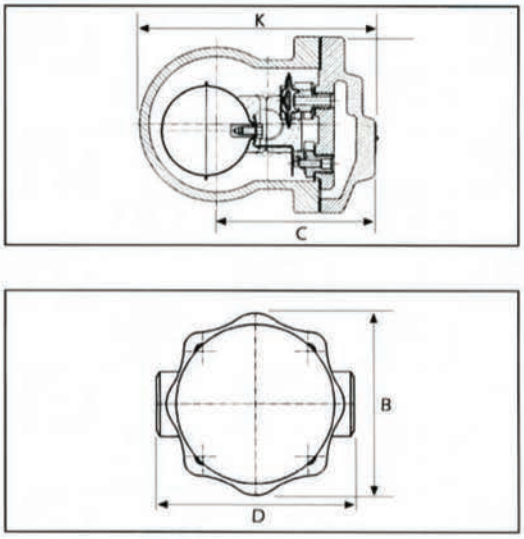

SK-61 FLOATING BALL STEAM TRAP

11/4"-2" THREADED

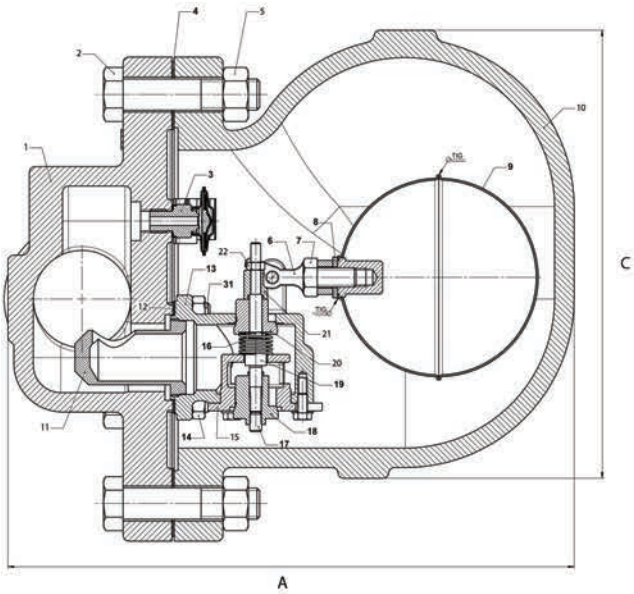

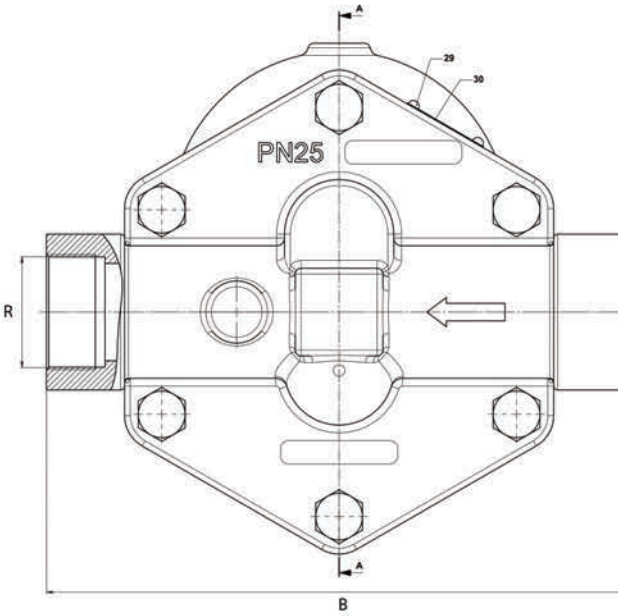

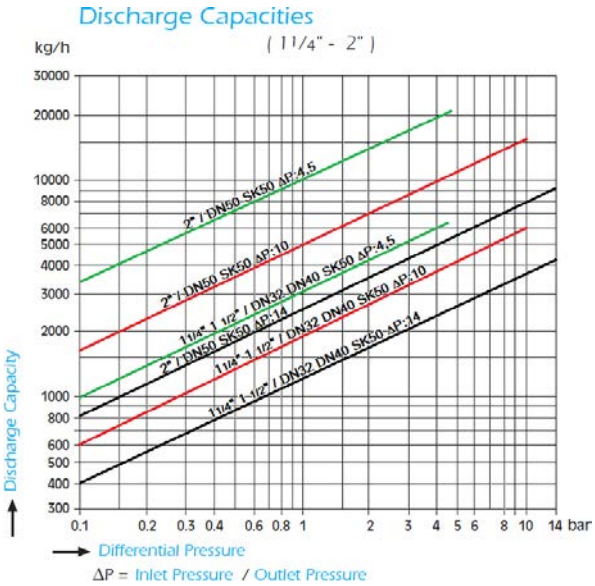

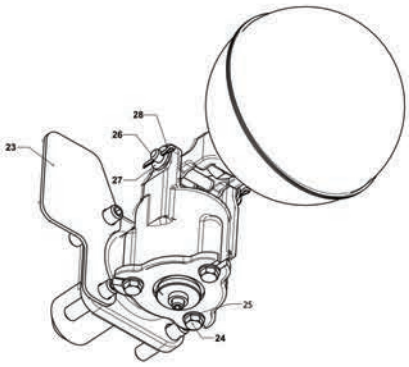

Dia.	DIMENSIONS (mm)			
	R	A	B	C
11/4"	DN32	290	300	230
11/2"	DN40	280	270	213
2"	DN50	280	270	213

SK-61 FLOATING BALL STEAM TRAP

11/4"-2" FLANGED

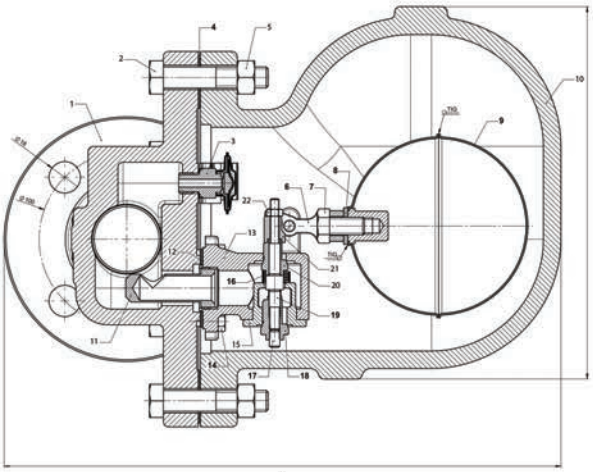

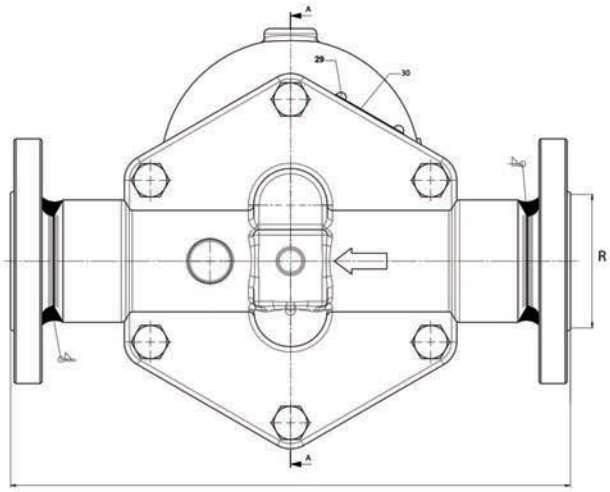

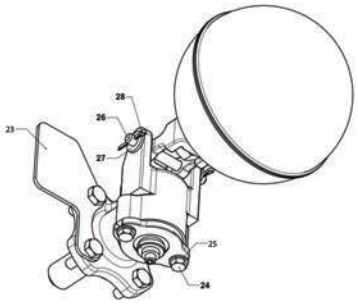

Dia.	DIMENSIONS (mm)			
	R	A	B	C
11/4"	DN32	318	320	213
11/2"	DN40	323	320	213
2"	DN50	335	320	230

AYVAZ®

HEAD OFFICE - FACTORY
Atatürk Sanayi Bölgesi Hadımköy Mahallesi Mustafa İnan Caddesi No: 44 Arnavutköy - İSTANBUL
Tel: +90 212 771 01 45 (pbx) | Fax: +90 212 771 47 27
info@ayvaz.com | www.ayvaz.com

Cona
Caserta/Italy
Tel: +39 0823 187 3988
rmolaro@ayvaz.com

Ayvaz Germany
Viernheim/Germany
Tel: +49 62046014399
germany@ayvaz.com

Ayvaz Ukraine
Kiev/Ukraine
Tel: +380 44 390 57 57
info@ayvaz.com.ua

Tricorr
Warsaw/Poland
Tel: +48 530 030 810
+48 533 603 335
tricorr@tricorr.eu

Ayvaz Azerbaijan
Baku/Azerbaijan
Tel: +99 (455) 579-84-32
ahayatov@ayvaz.com

Ayvaz Egypt
Cairo/Egypt
Tel: +20 122 819 78 29
andrew.eid@ayvaz.com

Ayvaz Gulf
Dubai/U.A.E
Tel: +971 563550822
+971 501306871
mideast@ayvaz.com

Ayvaz China
Ningbo/China
Tel: +86 152 5830 7361
msahin@ayvaz.com

Ayvaz Kazakhstan LLP
Almaty/Kazakhstan
Tel: +7 (727) 327 97 57
info_kz@ayvaz.com

Ayvaz N
Isperih/Bulgaria
Tel: +359 8431 27 32
office@ayvaz-n.eu

Ayvaz Serbia
Belgrade/Serbia
Tel: +381 61 658 70 52
yakbiyik@ayvaz.com

Ayvaz Vietnam
HCMC/Vietnam
ggursoy@ayvaz.com
Tel: +84 89 8508345

Ayvaz Americas
Rhode Island/USA
Tel: +1 401 737 8380
americas@ayvaz.com